FIRST ANGLE PROJECTION

(ALL DIMENSIONS ARE IN mm)

ESP-001-11A

DRG. NO. PY-DL-1-M104-8801-02 SH.01 OF 04

Annexure-5: 11KV SWTICHGEAR SLD

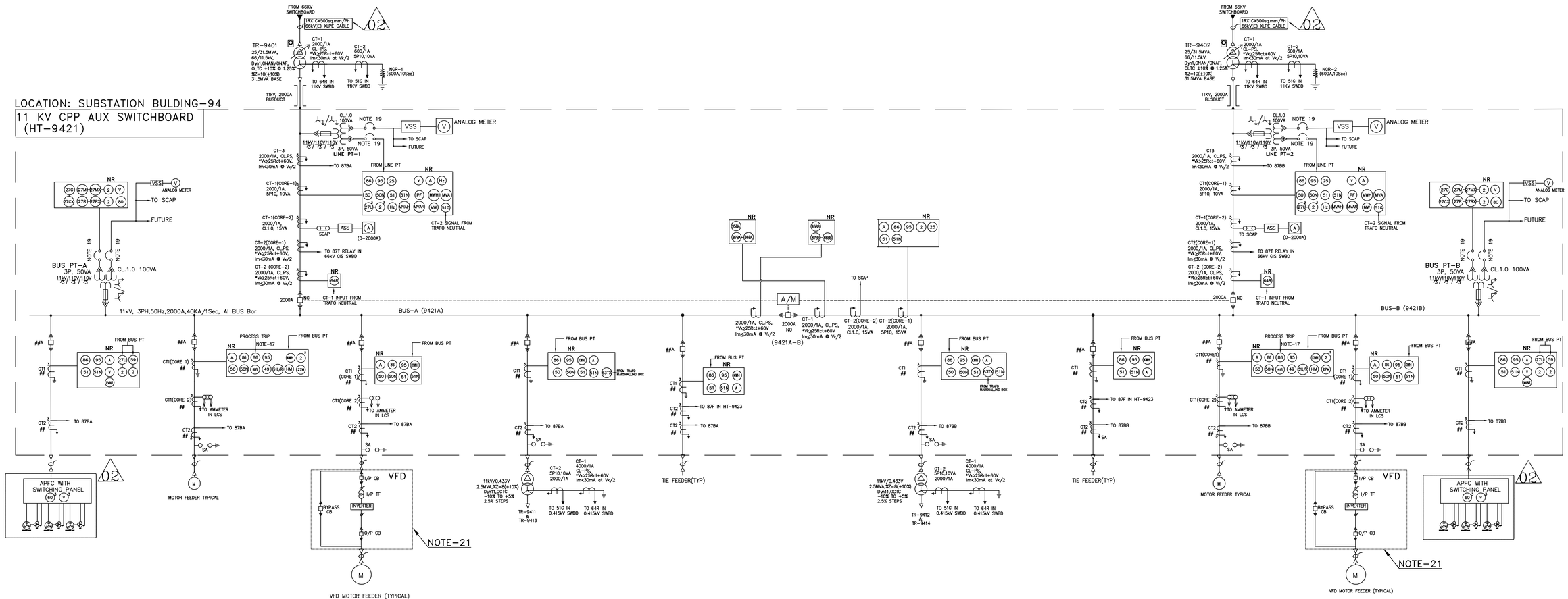

THE INFORMATION ON THIS DOCUMENT IS THE PROPERTY OF BHARAT HEAVY ELECTRICALS LIMITED. IT MUST NOT BE USED DIRECTLY OR INDIRECTLY IN ANY WAY DETRIMENTAL TO THE INTEREST OF THE COMPANY

GENERAL DIMENSIONAL LIMITS,FITS & TOLERANCES AS PER HY0230261

LEGEND:

- ON LOAD ISOLATOR
- CURRENT TRANSFORMER
- HV CIRCUIT BREAKER (DRAWOUT TYPE)
- FUSE
- DRAWOUT CONTACTS
- CABLE
- POTENTIAL TRANSFORMER
- MCB (4 POLE)
- BUS DUCT
- SA — SURGE ABSORBER
- NR — NUMERICAL RELAY
- LCS — LOCAL CONTROL STATION
- TTB — TEST TERMINAL BLOCK
- RVT — RESIDUAL VOLTAGE TRANSFORMER
- SAT — STATION AUXILIARY TRANSFORMER
- MFM — MULTIFUNCTIONAL METER
- POINT OF SYNCHRONISATION FROM SCAP
- (A) — AMMETER
- (V) — VOLTMETER (96 SQMM TAUT BAND)
- (MW) — MEGAWATT METER
- (KWH) — KILOWATT HOUR METER
- (PF) — POWER FACTOR METER
- (Hz) — FREQUENCY METER
- (HM) — HOUR RUN METER (5 DIGITS)
- (MVA) — MVA METER
- (MVAH) — MVAH METER
- (2) — TIMER
- (25) — CHECK SYNC RELAY
- (27) — UNDER VOLTAGE RELAY
- (27R) — RESIDUAL U/V RELAY (SETTING 40%)
- (27M) — U/V RELAY FOR TRIPPING MOTOR FDRS
- (27U) — U/V RELAY (SETTING RANGE 40-80%)
- (37) — UNDER CURRENT RELAY
- (40) — LOSS OF EXCITATION RELAY
- (46) — NEGATIVE PHASE SEQ RELAY
- (49) — THERMAL OVERLOAD RELAY
- (50) — INSTANTANEOUS OVER CURRENT RELAY
- (50N) — INSTANTANEOUS EARTH FAULT RELAY
- (51) — IDMTL O/C RELAY
- (51N) — IDMTL E/F RELAY
- (51LR) — LOCKED ROTOR RELAY
- (51V) — VOLTAGE RESTRAINED IDMTL OVER CURRENT RELAY
- (51G) — STANDBY E/F RELAY
- (59) — OVER VOLTAGE RELAY (DEFINTE TIME)
- (60) — NEUTRAL DISPLACEMENT RELAY
- (63TX) — TRANSFORMER AUX. RELAY
- (64R) — REF RELAY
- (80) — DC SUPPLY SUPERVISION RELAY
- (81) — UNDER FREQUENCY RELAY
- (86) — LOCKOUT RELAY
- (87T) — TRANSFORMER DIFFERENTIAL RELAY
- (87F) — CABLE DIFFERENTIAL RELAY
- (87G) — DG DIFFERENTIAL RELAY
- (87BA) (87BB) — BUS DIFFERENTIAL RELAY
- (86BA) (86BB) — BUS DIFFERENTIAL TRIP RELAY
- (95BA) (95BB) — BUS DIFFERENTIAL SUPERVISION RELAY
- (95) — TRIP CIRCUIT SUPERVISION RELAY
- (97) — PT MONITORING RELAY
- VSS — VOLTMETER SELECTION SWITCH
- ASS — AMMETER SELECTION SWITCH
- KWHT — ENERGY TRANSDUCER
- VT — VOLTAGE TRANSDUCER
- AT — CURRENT TRANSDUCER
- FT — FREQUENCY TRANSDUCER
- KWT — KW TRANSDUCER

NOTES:

01.## FOR CT DETAILS & OUTGOING FEEDER DETAILS OF 11KV SWITCHBOARDS REFER TABLES IN SHEET-04.
02.ALL BREAKERS ARE FULLY DRAWOUT TYPE.
03.CABLE ENTRY FROM BOTTOM.
04.PAINT SHADE OF THE PANEL -RAL7032
05.CONTROL SUPPLY SHALL BE 110V DC.
06.NUMERICAL RELAYS SHALL BE HOOKED UP TO DATA CONCENTRATOR AND MMI SYSTEM.SYSTEM ARCHITECTURE SHALL BE IEC-61850HSR.
07.SPRING CHARGING MOTOR SHALL BE SUITABLE FOR 110V DC.
08.REAR AND FRONT SIDE OF THE PANEL SHALL HAVE FEEDER DESCRIPTION AND PANEL No. ON METALLIC NAMEPLATE.
09.LINE PT SHALL BE SUPPLIED IN SEPERATE DRAWOUT MODULE.
10.HARDWARE INCLUDING INDICATING LAMPS(LED TYPE) SHALL BE PROVIDED AS PER CONTRACT SPECIFICATION/EIL DATA SHEETS.
11.REMOTE METERING AT STATION HMI IS PROVIDED THROUGH SOFT LINK FROM DATA CONCENTRATOR.
12.PROTECTION RELAYS ARE NUMERICAL TYPE.
13.STABILISING RESISTOR, METROSILS AS REQUIRED SHALL BE PROVIDED FOR PROTECTION RELAYS.
14.POWER CABLE SIZE SHALL BE AS PER HT POWER CABLE SIZING CALCULATIONS,WHICH WILL BE SUBMITTED SEPARATELY.
15.SUPPLY OF CABLES & TERMINATIONS FOR OWNER'S FEEDERS IS IN HPCL/EIL SCOPE.
16.NUMERICAL RELAY CONTROL SUPPLY SHALL BE 110V DC.
17.FOR PROCESS TRIPS ADDITIONAL SELF RESET TYPE LOCKOUT RELAY AND ITS INDICATION SHALL BE PROVIDED IN NR FOR MOTOR FEEDERS.
18.ONE NO. DC SUPPLY SUPERVISION RELAY(80) SHALL BE PROVIDED FOR EACH INCOMING DC SUPPLY TO THE SWITCHBOARD.
19.4 POLE 20A MCB TO BE PROVIDED ON LV SIDE OF THE BUS PTS AND LINE PTS.
20.*KNEE POINT VOLTAGE INDICATED IN THE SLD ARE TENTATIVE AND WILL BE AS PER OEM's RECOMENDATION BASED ON FINALISATION OF RELAY MODEL.
21.THE COMPLETE MOTOR PROTECTIONS (INCLUDING DIFFERENTIAL PROTECTION BASED VFD VENDOR RECOMMENDATION) WILL BE PART OF VFD VENDOR DRAWINGS WHICH WILL BE SUBMITTED BY BHEL EDN, BANGALORE.
22.THE BUS WIRE SUPERVISION 95B SHALL BE PROVIDED FOR ALARM AND SHALL NOT LEAD TO TRIP.
23.THE FOLLOWING FEEDERS SHALL BE PROVIDED WITH TIMERS FOR DELAYED TRIPPING ON BUS UNDER VOLTAGE WHILE THE UNDER VOLTAGE RELAY SHALL BE COMMON FOR THE BUS:
a)CAPACITOR FEEDERS
b)MOTOR FEEDERS
NUMERICAL RELAYS WHERE EVER PROVIDED FOR MOTORS & CAPACITOR FEEDERS SHALL USE IN BUILT UNDER VOLTAGE RELAY AND TIMER FOR DELAYED TRIPPING ON BUS UNDER VOLTAGE.
24.FOR OUTGOING PLANT FEEDERS FOR OWNER'S USE, THE SENDING END RELAYS FOR (87F) PROTECTION WILL BE PROVIDED BY BHEL.
RECEIVING END (87F)RELAY, CTS, FO CABLE FOR RELAYS (BOTH ENDS) & MOUNTING OF RELAYS IN RECEIVING END WILL BE IN OWNER'S SCOPE
25.DEDICATED RELAY (51V,51G,40,46,86,95,80,87G) FOR DG PROTECTION SHALL BE PROVIDED IN DG AMF PANEL. DETAILS OF SAME WILL BE INDICATED IN DG VENDOR DRAWING.
26.STABILIZING RESISTOR SHALL BE PROVIDED IN RESIDUAL EARTH FAULT CONNECTIONS FOR ALL MOTORS & TRANSFORMERS EVEN IN CASE OF NUMERICAL RELAYS TO PREVENT ANY SPURIOUS TRIPPING DURING STARTING.
27.ALL RELAYS EXCLUDING AUXILIARY RELAYS SHALL BE NUMERICAL MICROPROCESSOR BASED WITH IEC-61850 COMMUNICATIONS PROTOCOL.SYSTEM ARCHITECTURE SHALL BE IEC 61850 HSR.
28.NUMERICAL RELAYS FOR ALL MOTORS SHALL BE SUITABLE FOR TAKING RTD/BTD INPUTS.
02 29.INSULATED 110V DC CONTROL BUS, 240V SPACE HEATER BUS & 110V AC PT BUS TO BE RUN ALONG ALL SWITCHGEARS FOR EASE OF TAPPING AT RESPECTIVE LOCATIONS.

ALTERED	REV.	DATE	ALTERED	REV.	DATE	ALTERED	REV.	DATE	ALTERED	REV.	DATE	ALTERED	REV.	DATE	ALTERED	REV.	DATE	ALTERED	REV.	DATE	ALTERED G.MONICA	REV.	DATE	ALTERED G.MONICA
CHD/APPD			CHD/APPD			CHD/APPD			CHD/APPD			CHD/APPD			CHD/APPD			CHD/APPD	02	25.06.18	CHD/APPD J.K.PATTANAIK	01	19.05.18	CHD/APPD J.K.PATTANAIK
	ZONE			ZONE			ZONE			ZONE			ZONE			ZONE			ZONE			REVISED IN LINE WITH CONSULTANT COMMENTS ON R01.	ZONE		REVISED IN LINE WITH CONSULTANT COMMENTS ON R00.

PROJECT: CAPTIVE POWER PLANT (CPP) PACKAGE VISAKH REFINERY MODERNIZATION PROJECT (VRMP) JOB NO. B016

OWNER: HINDUSTAN PETROLEUM CORPORATION LIMITED

PMC: ENGINEERS INDIA LIMITED (EIL), NEW DELHI

BHARAT HEAVY ELECTRICALS LTD. HYDERABAD

	NAME	SIGN.	DATE	NO.OF VAR.
DRN.	GRM/AVS	-SD-	30.03.18	
CHD.	P.SURESH	-SD-	30.03.18	
APPD.	J.K.PATTANAIK	-SD-	30.03.18	

DEPT.	UNTOL. DIMS.	SCALE	WEIGHT (KG)	REF. TO ASSY. DRG.	ITEM NO.	NO.OF ITEMS
PE&SD CODE. 450	GR. ~~G/M/F~~			-N.A.-	-N.A.-	-N.A.-

TITLE: SINGLE LINE DIAGRAM OF 11kV SWITCHGEAR

CARD CODE: N.A.

BHEL DRG NO. PY-DL-1-M104-8801-02 REV. 02

CUST DRG NO.

SHT. No 01 NO. OF SHT. 04

SIGN. AND DATE | REF. DRG. NO. | COMPUTER FILE NAME | INVENTORY NO

ESP-001-11A

FIRST ANGLE PROJECTION

(ALL DIMENSIONS ARE IN mm)

ESP-001-11A

DRG. NO. PY-DL-1-M104-8801-02 SH. 02 OF 04

THE INFORMATION ON THIS DOCUMENT IS THE PROPERTY OF BHARAT HEAVY ELECTRICALS LIMITED. IT MUST NOT BE USED DIRECTLY OR INDIRECTLY IN ANY WAY DETRIMENTAL TO THE INTEREST OF THE COMPANY

GENERAL DIMENSIONAL LIMITS,FITS & TOLERANCES AS PER HY0230261

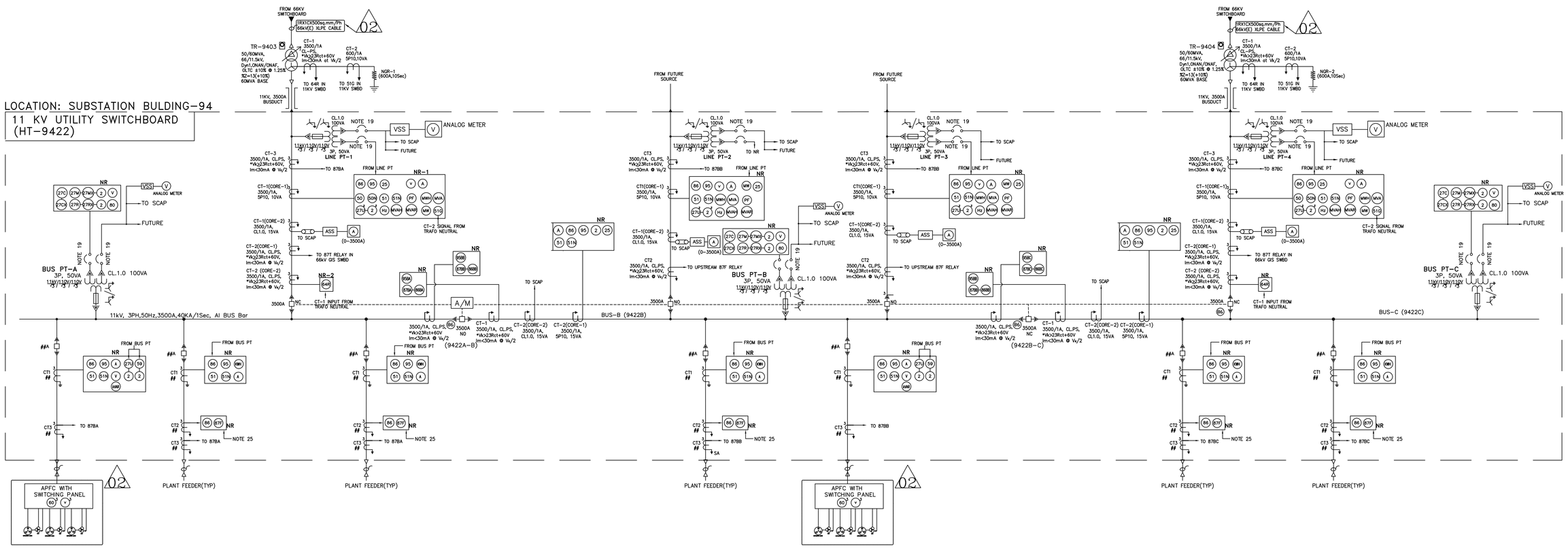

LEGEND:

- ON LOAD ISOLATOR
- CURRENT TRANSFORMER
- HV CIRCUIT BREAKER (DRAWOUT TYPE)
- FUSE
- DRAWOUT CONTACTS
- CABLE
- POTENTIAL TRANSFORMER
- MCB (4 POLE)
- BUS DUCT
- SA — SURGE ABSORBER
- NR — NUMERICAL RELAY
- LCS — LOCAL CONTROL STATION
- TTB — TEST TERMINAL BLOCK
- RVT — RESIDUAL VOLTAGE TRANSFORMER
- SAT — STATION AUXILIARY TRANSFORMER
- MFM — MULTIFUNCTIONAL METER
- ▲ — POINT OF SYNCHRONISATION FROM SCAP
- (A) — AMMETER
- (V) — VOLTMETER (96 SQMM TAUT BAND)
- (MW) — MEGAWATT METER
- (KWH) — KILOWATT HOUR METER
- (PF) — POWER FACTOR METER
- (Hz) — FREQUENCY METER
- (HM) — HOUR RUN METER (5 DIGITS)
- (MVA) — MVA METER
- (MVAH) — MVAH METER
- (2) — TIMER
- (25) — CHECK SYNC RELAY
- (27) — UNDER VOLTAGE RELAY
- (27R) — RESIDUAL U/V RELAY (SETTING 40%)
- (27M) — U/V RELAY FOR TRIPPING MOTOR FDRS
- (27U) — U/V RELAY (SETTING RANGE 40-80%)
- (37) — UNDER CURRENT RELAY
- (40) — LOSS OF EXCITATION RELAY
- (46) — NEGATIVE PHASE SEQ RELAY
- (49) — THERMAL OVERLOAD RELAY
- (50) — INSTANTANEOUS OVER CURRENT RELAY
- (50N) — INSTANTANEOUS EARTH FAULT RELAY
- (51) — IDMTL O/C RELAY
- (51N) — IDMTL E/F RELAY
- (51/LR) — LOCKED ROTOR RELAY
- (51V) — VOLTAGE RESTRAINED IDMTL OVER CURRENT RELAY
- (51G) — STANDBY E/F RELAY
- (59) — OVER VOLTAGE RELAY (DEFINTE TIME)
- (60) — NEUTRAL DISPLACEMENT RELAY
- (63TX) — TRANSFORMER AUX. RELAY
- (64R) — REF RELAY
- (80) — DC SUPPLY SUPERVISION RELAY
- (81) — UNDER FREQUENCY RELAY
- (86) — LOCKOUT RELAY
- (87T) — TRANSFORMER DIFFERENTIAL RELAY
- (87F) — CABLE DIFFERENTIAL RELAY
- (87G) — DG DIFFERENTIAL RELAY
- (87BA) (87BB) — BUS DIFFERENTIAL RELAY
- (86BA) (86BB) — BUS DIFFERENTIAL TRIP RELAY
- (95BA) (95BB) — BUS DIFFERENTIAL SUPERVISION RELAY
- (95) — TRIP CIRCUIT SUPERVISION RELAY
- (97) — PT MONITORING RELAY
- VSS — VOLTMETER SELECTION SWITCH
- ASS — AMMETER SELECTION SWITCH
- KWHT — ENERGY TRANSDUCER
- VT — VOLTAGE TRANSDUCER
- AT — CURRENT TRANSDUCER
- FT — FREQUENCY TRANSDUCER
- KWT — KW TRANSDUCER

PROJECT: CAPTIVE POWER PLANT (CPP) PACKAGE
VISAKH REFINERY MODERNIZATION PROJECT (VRMP)
JOB NO. B016

OWNER: HINDUSTAN PETROLEUM CORPORATION LIMITED

PMC: ENGINEERS INDIA LIMITED (EIL), NEW DELHI

BHARAT HEAVY ELECTRICALS LTD. HYDERABAD

	NAME	SIGN.	DATE	NO.OF VAR.
DRN.	GRM/AVS	-SD-	30.03.18	
CHD.	P.SURESH	-SD-	30.03.18	
APPD.	J.K.PATTANAIK	-SD-	30.03.18	

REV.	DATE	ALTERED	CHD/APPD
02	25.06.18	G.MONICA	J.K.PATTANAIK
01	19.05.18	G.MONICA	J.K.PATTANAIK

REVISED IN LINE WITH CONSULTANT COMMENTS ON R01.

REVISED IN LINE WITH CONSULTANT COMMENTS ON R00.

DEPT. PE&SD CODE. 450 | UNTOL. DIMS. GR. ~~G/M/F~~ | SCALE | WEIGHT (KG) | REF. TO ASSY. DRG. -N.A.- | ITEM NO. -N.A.- | NO.OF ITEMS -N.A.-

TITLE: SINGLE LINE DIAGRAM OF 11kV SWITCHGEAR

CARD CODE N.A. | BHEL DRG NO. PY-DL-1-M104-8801-02 | REV. 02 | CUST DRG NO. | SHT. No 02 | NO. OF SHT. 04

INVENTORY NO | SIGN. AND DATE | REF. DRG. NO. | COMPUTER FILE NAME

ESP-001-11A

FIRST ANGLE PROJECTION

(ALL DIMENSIONS ARE IN mm)

ESP-001-11A

DRG. NO. PY-DL-1-M104-8801-02 SH.03 OF 04

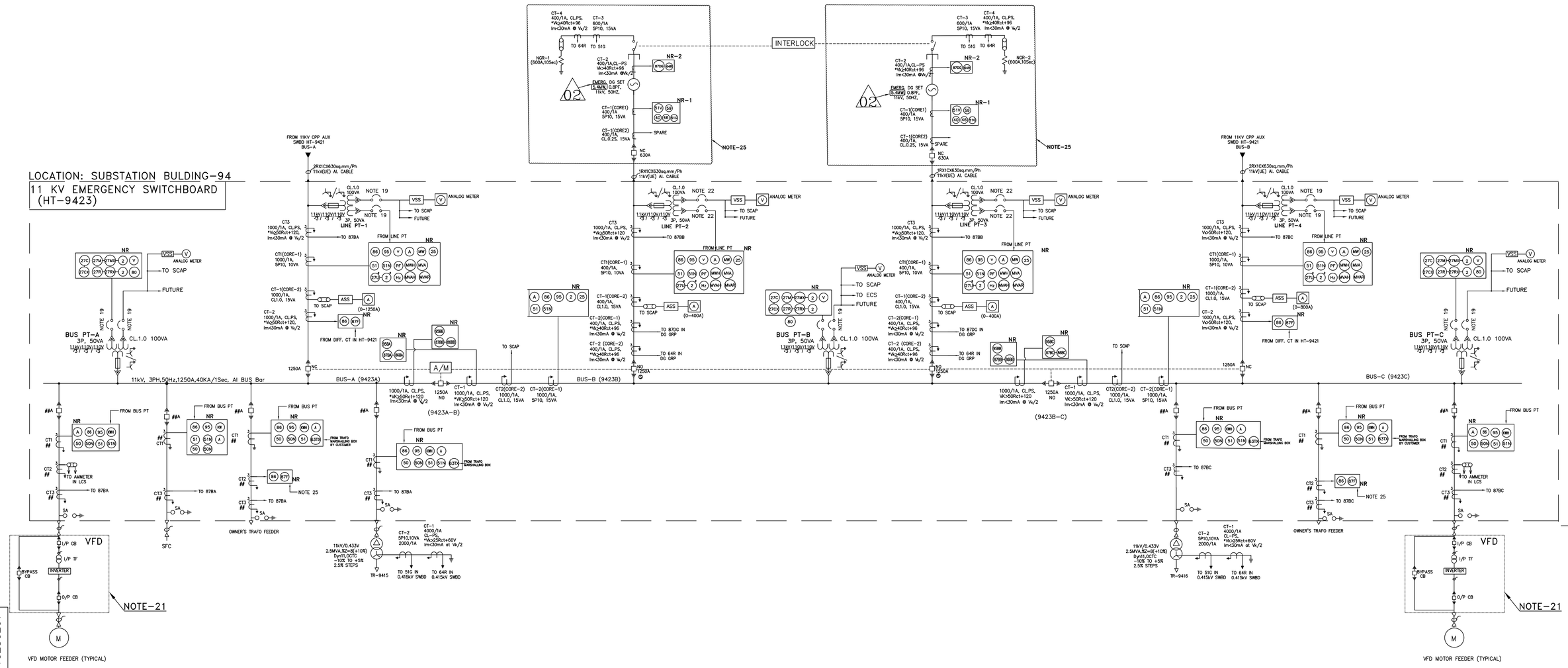

LEGEND:

- ON LOAD ISOLATOR
- CURRENT TRANSFORMER
- HV CIRCUIT BREAKER (DRAWOUT TYPE)
- FUSE
- DRAWOUT CONTACTS
- CABLE
- POTENTIAL TRANSFORMER
- MCB (4 POLE)
- BUS DUCT
- SA SURGE ABSORBER
- NR NUMERICAL RELAY
- LCS LOCAL CONTROL STATION
- TTB TEST TERMINAL BLOCK
- RVT RESIDUAL VOLTAGE TRANSFORMER
- SAT STATION AUXILIARY TRANSFORMER
- MFM MULTIFUNCTIONAL METER
- ▲ POINT OF SYNCHRONISATION FROM SCAP
- (A) AMMETER
- (V) VOLTMETER (96 SQMM TAUT BAND)
- (MW) MEGAWATT METER
- (KWH) KILOWATT HOUR METER
- (PF) POWER FACTOR METER
- (Hz) FREQUENCY METER
- (HM) HOUR RUN METER (5 DIGITS)
- (MVA) MVA METER
- (MVAH) MVAH METER
- (2) TIMER
- (25) CHECK SYNC RELAY
- (27) UNDER VOLTAGE RELAY
- (27R) RESIDUAL U/V RELAY (SETTING 40%)
- (27M) U/V RELAY FOR TRIPPING MOTOR FDRS
- (27U) U/V RELAY (SETTING RANGE 40-80%)
- (37) UNDER CURRENT RELAY
- (40) LOSS OF EXCITATION RELAY
- (46) NEGATIVE PHASE SEQ RELAY
- (49) THERMAL OVERLOAD RELAY
- (50) INSTANTANEOUS OVER CURRENT RELAY
- (50N) INSTANTANEOUS EARTH FAULT RELAY
- (51) IDMTL O/C RELAY
- (51N) IDMTL E/F RELAY
- (51/R) LOCKED ROTOR RELAY
- (51V) VOLTAGE RESTRAINED IDMTL OVER CURRENT RELAY
- (51G) STANDBY E/F RELAY
- (59) OVER VOLTAGE RELAY (DEFINTE TIME)
- (60) NEUTRAL DISPLACEMENT RELAY
- (63TX) TRANSFORMER AUX. RELAY
- (64R) REF RELAY
- (80) DC SUPPLY SUPERVISION RELAY
- (81) UNDER FREQUENCY RELAY
- (86) LOCKOUT RELAY
- (87T) TRANSFORMER DIFFERENTIAL RELAY
- (S) BREAKER WITH SYNCHRONIZATION FACILITY
- (87F) CABLE DIFFERENTIAL RELAY
- (87DG) DG DIFFERENTIAL RELAY
- (87BA) (87BB) BUS DIFFERENTIAL RELAY
- (86BA) (86BB) BUS DIFFERENTIAL TRIP RELAY
- (95BA) (95BB) BUS DIFFERENTIAL SUPERVISION RELAY
- (95) TRIP CIRCUIT SUPERVISION RELAY
- (97) PT MONITORING RELAY
- VSS VOLTMETER SELECTION SWITCH
- ASS AMMETER SELECTION SWITCH
- KWHT ENERGY TRANSDUCER
- VT VOLTAGE TRANSDUCER
- AT CURRENT TRANSDUCER
- FT FREQUENCY TRANSDUCER
- KWT KW TRANSDUCER

ALTERED	REV.	DATE	ALTERED	REV.	DATE	ALTERED	REV.	DATE	ALTERED	REV.	DATE	ALTERED	REV.	DATE	ALTERED	REV.	DATE	ALTERED	REV.	DATE	ALTERED	REV.	DATE	ALTERED	REV.	DATE	ALTERED	REV.	DATE
CHD/APPD			CHD/APPD			CHD/APPD			CHD/APPD			CHD/APPD			CHD/APPD			CHD/APPD			CHD/APPD			CHD/APPD	02	25.06.18	CHD/APPD	01	19.05.18
	ZONE			ZONE			ZONE			ZONE			ZONE			ZONE			ZONE			ZONE			ZONE		ALTERED G.MONICA	ZONE		ALTERED G.MONICA
																											REVISED IN LINE WITH CONSULTANT COMMENTS ON R01.			REVISED IN LINE WITH CONSULTANT COMMENTS ON R00.

PROJECT: CAPTIVE POWER PLANT (CPP) PACKAGE
VISAKH REFINERY MODERNIZATION PROJECT (VRMP)
JOB NO. B016

OWNER: HINDUSTAN PETROLEUM CORPORATION LIMITED

PMC: ENGINEERS INDIA LIMITED (EIL), NEW DELHI

BHARAT HEAVY ELECTRICALS LTD. HYDERABAD

	NAME	SIGN.	DATE	NO.OF VAR.
DRN.	GRM/AVS	-SD-	30.03.18	
CHD.	P.SURESH	-SD-	30.03.18	
APPD.	J.K.PATTANAIK	-SD-	30.03.18	

DEPT.	UNTOL. DIMS.	SCALE	WEIGHT (KG)	REF. TO ASSY. DRG.	ITEM NO.	NO.OF ITEMS
PE&SD CODE. 450	GR. ~~C/M/F~~			-N.A.-	-N.A.-	-N.A.-

TITLE: SINGLE LINE DIAGRAM OF 11kV SWITCHGEAR

CARD CODE: N.A.

BHEL DRG NO. PY-DL-1-M104-8801-02 REV. 02

CUST DRG NO.

SHT. No 03 NO. OF SHT. 04

THE INFORMATION ON THIS DOCUMENT IS THE PROPERTY OF BHARAT HEAVY ELECTRICALS LIMITED. IT MUST NOT BE USED DIRECTLY OR INDIRECTLY IN ANY WAY DETRIMENTAL TO THE INTEREST OF THE COMPANY

GENERAL DIMENSIONAL LIMITS,FITS & TOLERANCES AS PER HY0230261

COMPUTER FILE NAME | REF. DRG. NO. | SIGN. AND DATE | INVENTORY NO

ESP-001-11A

FIRST ANGLE PROJECTION

(ALL DIMENSIONS ARE IN mm)

ESP-001-11A

##TABLE-1: 11KV CPP AUXILIARY SWITCHBOARD (HT-9421) OUTGOING FEEDER DETAILS.

SL NO.	FEEDER DISCRIPTION	RATING	TYPE	BREAKER RATING	TOTAL	BUS-A	BUS-B	CT1 CORE-1	CT1 CORE-2	CT2	TERMINATION
1	LV DIST. TRAFO-1 (TR-9411)	2.5MVA	TRAFO	630A	1	1	–	150/1A, 5P10, 10VA	NA	2000/1A, CL.PS, *Vk>25Rct+60V, Im<30mA @ Vk/2	1RX3CX185sq.mm 11kV(UE)Al.Cable
2	LV DIST. TRAFO-2 (TR-9412)	2.5MVA	TRAFO	630A	1	–	1	150/1A, 5P10, 10VA	NA		1RX3CX185sq.mm 11kV(UE)Al.Cable
3	LV DIST. TRAFO-3 (TR-9413)	2.5MVA	TRAFO	630A	1	1	–	150/1A, 5P10, 10VA	NA		1RX3CX185sq.mm 11kV(UE)Al.Cable
4	LV DIST. TRAFO-4 (TR-9414)	2.5MVA	TRAFO	630A	1	–	1	150/1A, 5P10, 10VA	NA		1RX3CX185sq.mm 11kV(UE)Al.Cable
5	(TIE FEEDER)TO HT SWGR HT-9423 BUS-A	16MVA	TIE FEEDER	1250A	1	1	–	1000/1A, 5P10, 10VA	CT-2: 1000/1A, CL.PS, Vk≥50Rct+120V Im<30mA @ Vk/2		2RX1CX630sq.mm/Ph 11kV(UE)Al.Cable
6	(TIE FEEDER)TO HT SWGR HT-9423 BUS-B	16MVA	TIE FEEDER	1250A	1	–	1	1000/1A, 5P10, 10VA	CT-2: 1000/1A, CL.PS, Vk≥50Rct+120V Im<30mA @ Vk/2		2RX1CX630sq.mm/Ph 11kV(UE)Al.Cable
7	VFD FOR VVHP BFP	1500KW	VFD FEEDER	630A (1W+1S/B)	2	1	1	125/1A, 5P10, 10VA	125/1A, CL1.0, 15VA		1RX3CX185sq.mm 11kV(UE)Al.Cable
8	OIL FREE AIR COMPRESSOR	300KW	MOTOR	630A (1W+1S/B)	2	1	1	25/1A, 5P10, 10VA	25/1A, CL1.0, 15VA		1RX3CX185sq.mm 11kV(UE)Al.Cable
9 (02)	FD FAN HRSG	775KW	MOTOR	630A	1	–	1	65/1A, 5P10, 10VA	65/1A, CL1.0, 15VA		1RX3CX185sq.mm 11kV(UE)Al.Cable
10	AA COMPRESSOR MOTOR	250KW	MOTOR	630A (1W+1S/B)	2	1	1	25/1A, 5P10, 10VA	25/1A, CL1.0, 15VA		1RX3CX185sq.mm 11kV(UE)Al.Cable
11	OWNER'S MOTOR FEEDERS	250KW	MOTOR	630A	3	1	2	25/1A, 5P10, 10VA	25/1A, CL1.0, 15VA		OWNER'S SCOPE
12	CAPACITOR FEEDER	3.4MVAR	CAPACITOR	630A	2	1	1	200/1A, 5P10, 10VA	NA		1RX3CX240sq.mm 11kV(UE)Al.Cable
13	SPARE TRAFO	–	TRAFO	630A	1	1	–	150/1A, 5P10, 10VA	NA		–
14	SPARE MOTOR	–	MOTOR	630A	1	–	1	25-65/1A, 5P10, 10VA	25-65/1A, CL1.0, 15VA		–
15	SPARE VFD	–	VFD FEEDER	630A	1	1	–	125/1A, 5P10, 10VA	125/1A, CL1.0, 15VA		–
16	SPARE TIE FEEDER	–	TIE FEEDER	1250A	1	–	1	1000/1A, 5P10, 10VA	1000/1A, CL.PS, Vk≥50Rct+120V Im<30mA @ Vk/2		

##TABLE-2: 11KV UTILITY SWITCHBOARD (HT-9422) OUTGOING FEEDER DETAILS.

SL NO.	FEEDER DISCRIPTION	RATING	TYPE	BREAKER RATING	TOTAL	BUS-A	BUS-B	BUS-C	CT1 CORE-1	CT3	CT2	TERMINATION
1	SPARE PLANT FEEDER		PLANT FEEDER	630A	2	1	–	1	600/1A, 5P10, 10VA	3500/1A, CL.PS, *Vk≥23Rct+60V Im<30mA @ Vk/2	600/1A,CL.PS *Vk≥134Rct+320V Im<30mA @Vk/2	OWNER'S SCOPE
2	TO SS-95(RODM)	10MW	PLANT FEEDER	1250A	2	1	–	1	800/1A, 5P10, 10VA		800/1A,CL.PS *Vk≥100Rct+240V Im<30mA @Vk/2	OWNER'S SCOPE
3	TO SS-96(TANKAGES)	7.8MW	PLANT FEEDER	630A	2	1	–	1	600/1A, 5P10, 10VA		600/1A,CL.PS *Vk≥134Rct+320V Im<30mA @Vk/2	OWNER'S SCOPE
4	TO SS-97(IETP)	5MW	PLANT FEEDER	630A	2	1	–	1	400/1A, 5P10, 10VA		400/1A,CL.PS *Vk≥200Rct+480V Im<30mA @Vk/2	OWNER'S SCOPE
5	SPARE PLANT FEEDER		PLANT FEEDER	800A	2	1	1	–	800/1A, 5P10, 10VA		800/1A,CL.PS *Vk≥100Rct+240V Im<30mA @Vk/2	OWNER'S SCOPE
6	TO SS-87(NIU/ISOM)	5MW	PLANT FEEDER	630A	2	1	1	–	400/1A, 5P10, 10VA		400/1A,CL.PS *Vk≥200Rct+480V Im<30mA @Vk/2	OWNER'S SCOPE
7	TO SS-89(N2 PLANT)	7.5MW	PLANT FEEDER	630A	2	1	1	–	600/1A, 5P10, 10VA		600/1A,CL.PS *Vk≥134Rct+320V Im<30mA @Vk/2	OWNER'S SCOPE
8	TO SS-86(CT PKG)	19MW	PLANT FEEDER	1600A	1	–	1	–	1500/1A, 5P10, 10VA		1500/1A,CL.PS *Vk≥54Rct+130V Im<30mA @Vk/2	OWNER'S SCOPE
9	CAPACITOR FEEDER	2.5MVAR	CAPACITOR	630A	2	1	1	–	150/1A, 5P10, 10VA		NA	1RX3CX240sq.mm 11kV(UE)Al.Cable
10	SPARE PLANT FEEDER	–	PLANT FEEDER	1250A	2	1	–	1	800/1A, 5P10, 10VA		800/1A,CL.PS *Vk≥100Rct+240V Im<30mA @Vk/2	OWNER'S SCOPE
11	SPARE PLANT FEEDER	–	PLANT FEEDER	630A	2	1	1	–	600/1A, 5P10, 10VA		600/1A,CL.PS *Vk≥134Rct+320V Im<30mA @Vk/2	OWNER'S SCOPE
12	SPARE PLANT FEEDER	–	PLANT FEEDER	1600A	1	–	1	–	1500/1A, 5P10, 10VA		1500/1A,CL.PS *Vk≥54Rct+130V Im<30mA @Vk/2	OWNER'S SCOPE
13	SPARE PLANT FEEDER	–	PLANT FEEDER	630A	1	–	–	1	400/1A, 5P10, 10VA		400/1A,CL.PS *Vk≥200Rct+480V Im<30mA @Vk/2	OWNER'S SCOPE

##TABLE-3: 11KV EMERGENCY SWITCHBOARD (HT-9423) OUTGOING FEEDER DETAILS.

SL NO.	FEEDER DISCRIPTION	RATING	TYPE	BREAKER RATING	TOTAL	BUS-A	BUS-C	CT1	CT3	CT2	TERMINATION
1	LV DIST. TRAFO TO EPC-9433 BUS-A	2.5MVA	TRAFO	630A	1	1	–	150/1A, 5P10, 10VA	1000/1A, CL.PS, *Vk>50Rct+120, Im<30mA @ Vk/2	NA	1RX3CX185sq.mm 11kV(UE)Al.Cable
2	LV DIST. TRAFO TO EPC-9433 BUS-B	2.5MVA	TRAFO	630A	1	–	1	150/1A, 5P10, 10VA		NA	1RX3CX185sq.mm 11kV(UE)Al.Cable
3	SFC	2250kVA	TRAFO	630A	1	1	–	150/1A, 5P10, 10VA		NA	1RX3CX185sq.mm 11kV(UE)Al.Cable
4	VFD FOR VHP EXPORT FEED WATER PUMP(1W)	850KW	VFD FEEDER	630A (1W+1S/B)	2	1	1	65/1A, 5P10, 10VA		65/1A, CL1.0, 15VA	1RX3CX185sq.mm 11kV(UE)Al.Cable
5	TO SS-83 (CDU)	0.9MW	TRAFO	630A	1	1	–	65/1A, 5P10, 10VA		65/1A, CL.PS, Vk≥*, Im<30mA @ Vk/2	OWNER'S SCOPE
6	TO SS-90 (HGU)	1MVA	TRAFO	630A	1	1	–	65/1A, 5P10, 10VA		65/1A, CL.PS, Vk≥*, Im<30mA @ Vk/2	OWNER'S SCOPE
7	TO SS-82 (FCHCU)	2.5MW	TRAFO	630A	1	1	–	200/1A, 5P10, 10VA		200/1A, CL.PS, Vk≥*, Im<30mA @ Vk/2	OWNER'S SCOPE
8	TO SS-95 (RODM)	1.6MVA	TRAFO	630A	1	1	–	125/1A, 5P10, 10VA		125/1A, CL.PS, Vk>*, Im<30mA @ Vk/2	OWNER'S SCOPE
9	TO SS-84 (RUF)	3MW	TRAFO	630A	1	–	1	250/1A, 5P10, 10VA		250/1A, CL.PS, Vk>*, Im<30mA @ Vk/2	OWNER'S SCOPE
10	TO SS-86 (CT)	630kVA	TRAFO	630A	1	–	1	50/1A, 5P10, 10VA		50/1A, CL.PS, Vk>*, Im<30mA @ Vk/2	OWNER'S SCOPE
11	TO SS-87 (NIU/ISOM)	2MVA	TRAFO	630A	1	–	1	125/1A, 5P10, 10VA		125/1A, CL.PS, Vk>*, Im<30mA @ Vk/2	OWNER'S SCOPE
12	SPARE OWNER'S FEEDER	–	TRAFO	630A	2	1	1	50-65/1A, 5P10, 10VA		50-65/1A, CL.PS, Vk>*, Im<30mA @ Vk/2	OWNER'S SCOPE
13	SPARE OWNER'S FEEDER	–	TRAFO	630A	1	1	–	200-250/1A 5P10, 10VA		200-250/1A, CL.PS, Vk>*, Im<30mA @ Vk/2	OWNER'S SCOPE
14	SPARE OWNER'S FEEDER	–	TRAFO	630A	1	–	1	125-150/1A, 5P10, 10VA		125-150/1A, CL.PS, Vk>*, Im<30mA @ Vk/2	OWNER'S SCOPE

REV.	DATE	ALTERED	CHD/APPD
02	25.06.18	REVISED IN LINE WITH CONSULTANT COMMENTS ON R01.	G.MONICA / J.K.PATTANAIK
01	19.05.18	REVISED IN LINE WITH CONSULTANT COMMENTS ON R00.	G.MONICA / J.K.PATTANAIK

PROJECT: CAPTIVE POWER PLANT (CPP) PACKAGE
VISAKH REFINERY MODERNIZATION PROJECT (VRMP)
JOB NO. B016

OWNER: HINDUSTAN PETROLEUM CORPORATION LIMITED

PMC: ENGINEERS INDIA LIMITED (EIL), NEW DELHI

BHARAT HEAVY ELECTRICALS LTD. HYDERABAD

	NAME	SIGN.	DATE	NO.OF VAR.
DRN.	GRM/AVS	-SD-	30.03.18	
CHD.	P.SURESH	-SD-	30.03.18	
APPD.	J.K.PATTANAIK	-SD-	30.03.18	

DEPT. PE&SD CODE. 450 | UNTOL. DIMS. GR. ~~G/M/F~~ | SCALE | WEIGHT (KG) | REF. TO ASSY. DRG. -N.A.- | ITEM NO. -N.A.- | NO.OF ITEMS -N.A.-

TITLE: SINGLE LINE DIAGRAM OF 11kV SWITCHGEAR

CARD CODE N.A. | BHEL DRG NO. PY-DL-1-M104-8801-02 | CUST DRG NO. | REV. 02 | SHT. No 04 | NO. OF SHT. 04

THE INFORMATION ON THIS DOCUMENT IS THE PROPERTY OF BHARAT HEAVY ELECTRICALS LIMITED. IT MUST NOT BE USED DIRECTLY OR INDIRECTLY IN ANY WAY DETRIMENTAL TO THE INTEREST OF THE COMPANY

GENERAL DIMENSIONAL LIMITS,FITS & TOLERANCES AS PER HY0230261

INVENTORY NO | SIGN. AND DATE | REF. DRG. NO. | COMPUTER FILE NAME

COMMENT SHEET

DOC. No.	B016		
	JOB No.	TR .NO.	S.NO.

PROJECT: VRMP PROJECT, VIZAG **CLIENT :** M/s HPCL-Vizag
NAME OF PACKAGE: CPP PACKAGE **CONTRACTOR:** M/s BHEL

Sr. No.	COMMENT/ OBSERVATION	RESOLUTION/ ACTION
1	**DRAWING / DOCUMENT TITLE : 11kV SWITCHGEAR SLD** **DOCUMENT NUMBER: PY-DL-1-M104-8801-02 R 01** **CATEGORY/CODE: 2**	
1.1	It is understood that 3 steps are provided in each capacitor bank. However the relay 60 (neutral displacement relay) is provided in 11kV switchgear. Please check.	Noted and corrected in revised SLD. Please note that, the neutral displacement relay located in the APFC panel for each step of capacitor bank
1.2	Emergency DG rating shall updated as per final sizing calculations.	Noted. The Emergency DG rating is corrected in line with revised DG set sizing calculations
1.3	66kV 1RX1CX300 sqmm is not adequate for 50/60MVA transformer. Please check and correct. Furnish 66kV cable sizing calculations.	Noted and corrected in the revised SLD. 66kV cable size is 3RX1CX500 sqmm XLPE cable with copper conductor for 50/60MVA transformer. 66kV cable sizing calculation were already furnished by BHEL-TBG for approval.
	Client comments	
1.4	Insulated 110v Dc Control Bus, 240v Space Heater Bus & 110v Ac Pt Bus To Be Run Along All Switchgears For Ease Of Tapping At Respective Locations. Same to be indicated in SLD.	Noted and incorporated in revised SLD under notes

LEGENDS FOR REVIEW CODE:-

1: NO COMMENTS
2: PROCEED WITH MANUFACTURE/FABRICATION AS PER COMMENTED.DRAWING/DOCUMENTS. REVISED DRAWING/DOCUMENT REQUIRED.
3: DOCUMENT DOES NOT CONFORM TO BASIC REQUIREMENTS AS MARKED. RESUBMIT DOCUMENT.
I: RETAINED FOR RECORDS.
V: VOID.

COMMENTS BY (NAME & SIGN) **Sai**
DATE: **13.06.18**
DEPARTMENT: **ELECTRICAL**

ENGINEERS INDIA LIMITED, NEW DELHI